NATUZZI EDITIONS

ENCORE

- Vers. 009

- Vers. 154

- Vers. 154

NATUZZI EDITIONS

ENCORE

SCHEMATICS

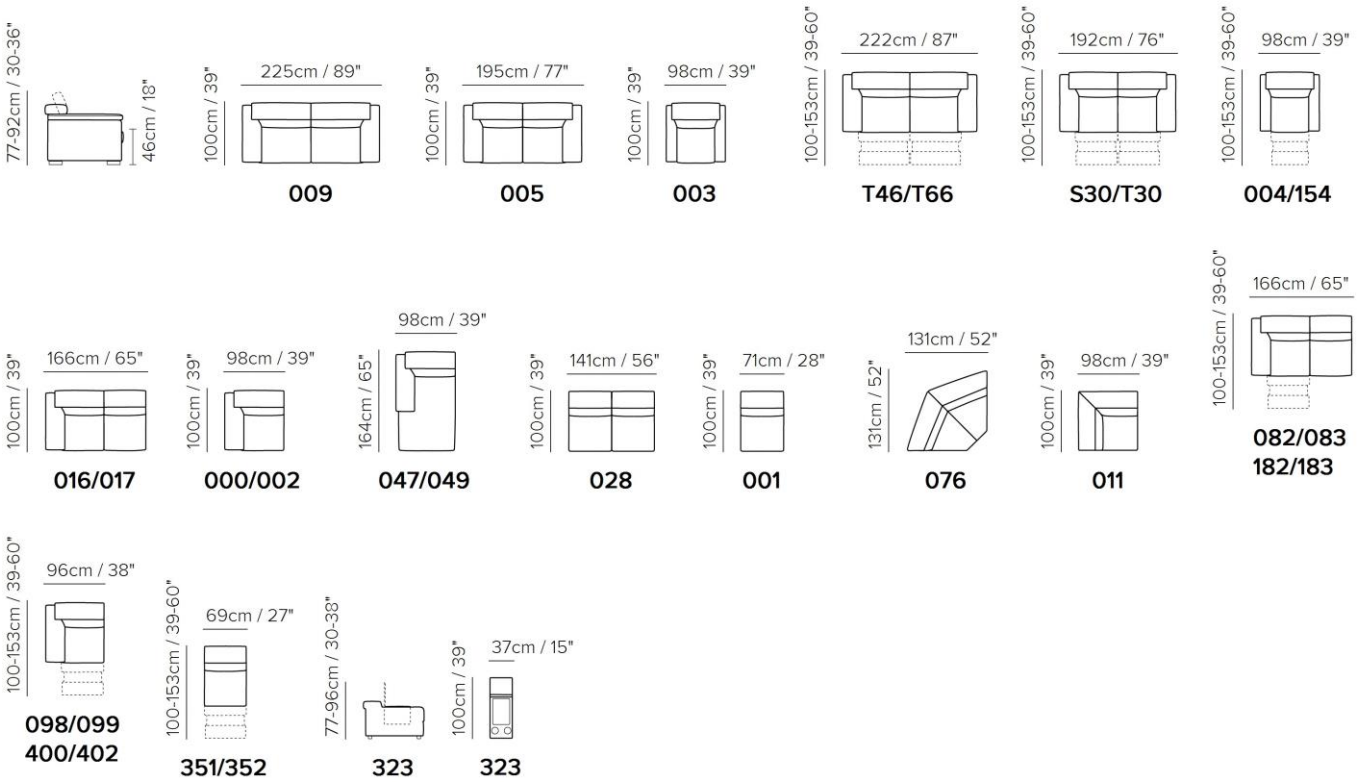

COMPOSITION EXAMPLES

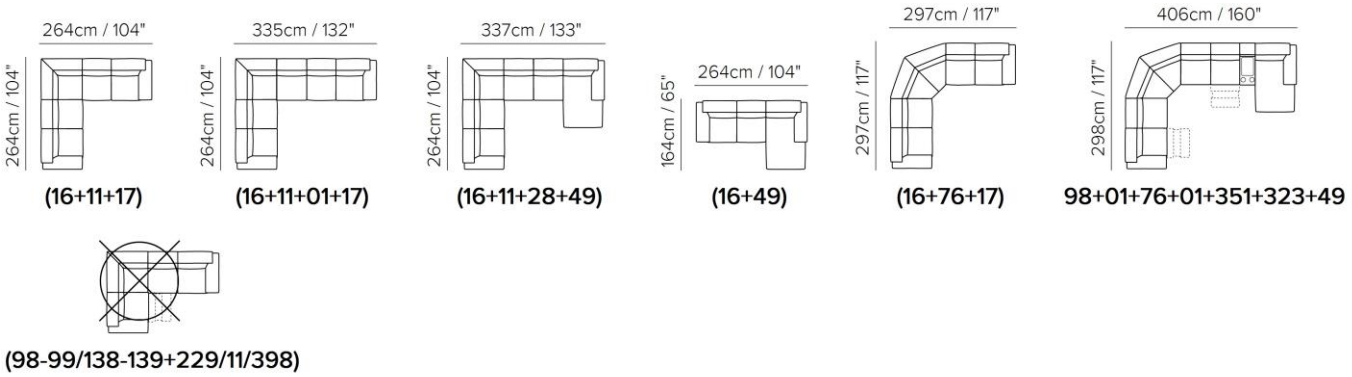

© 2012 Natuzzi S.p.A. - All rights reserved. The trademark, logos and designs are property of Natuzzi S.p.A. Any unauthorized reproduction, copying, disclosure, modification or use (in any way) is strictly forbidden.